10 Install Vertical Operating Pipe
Install Pipe Splice, Bearing Plate, Position Indicators, and Ground Strap

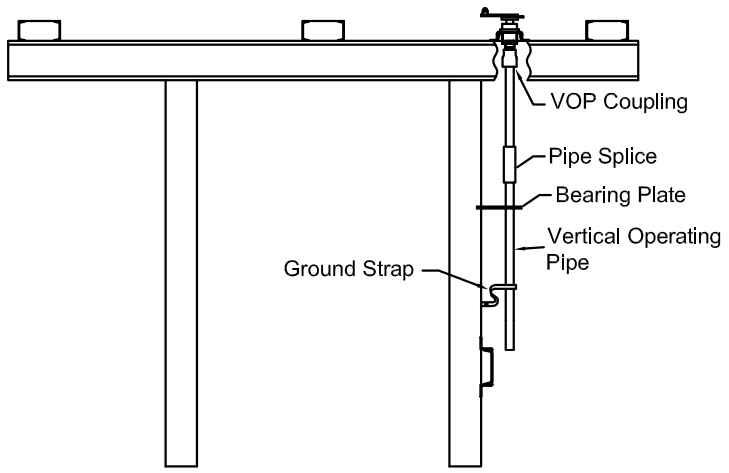

11 Install Offset Rod

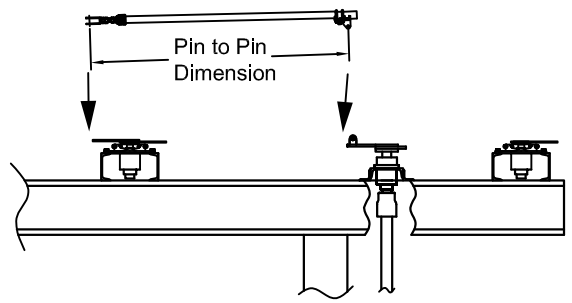

Pin to pin dimension is located on installation drawing

12 Install Operator

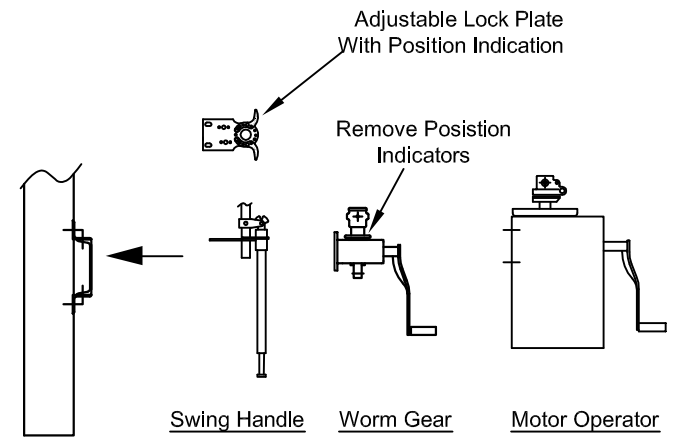

Dead Center ~ "Toggle"

- Offset bearing crank travels past dead center.
- When operating the switch, the offset bearing should "snap" over dead-center in the closed and open positions. This is also referred to as toggle. This serves as a signal to the operator that the switch is either fully open or closed. This is also a safety feature that insures the switch is locked either in the open or closed position.

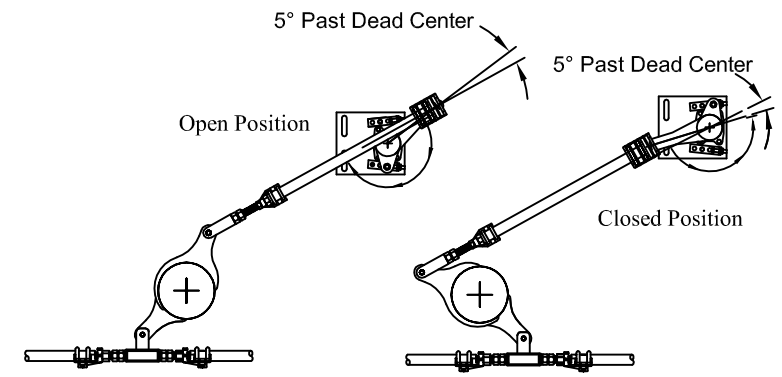

13a Adjust Drive Phase

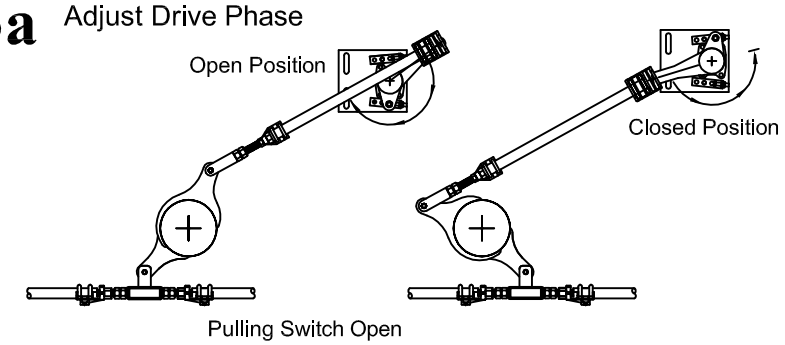

Shortening Offset Rod

- Reduces toggle pressure in closed and adds pressure to open position.
- Increase blade opening and decrease blade closing.

Lengthening Offset Rod

- Reduces toggle pressure in open and adds pressure to closed position.
- Increase blade closing and decrease blade opening.

13b Adjust Drive Phase

The adjustable radius crank adjustment increases or decrease throw to the open and closed position.

- Lenghening increases travel and toggle pressure in open and closed.
- Shortening reduces travel and toggle pressure in open and closed.

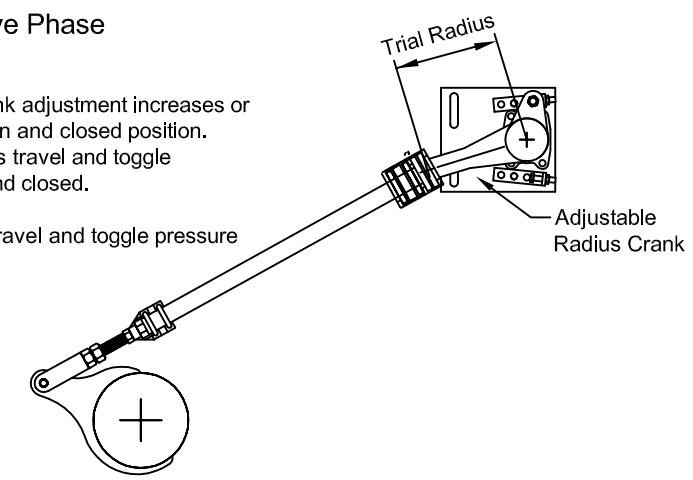

14 Install Interphase Linkage

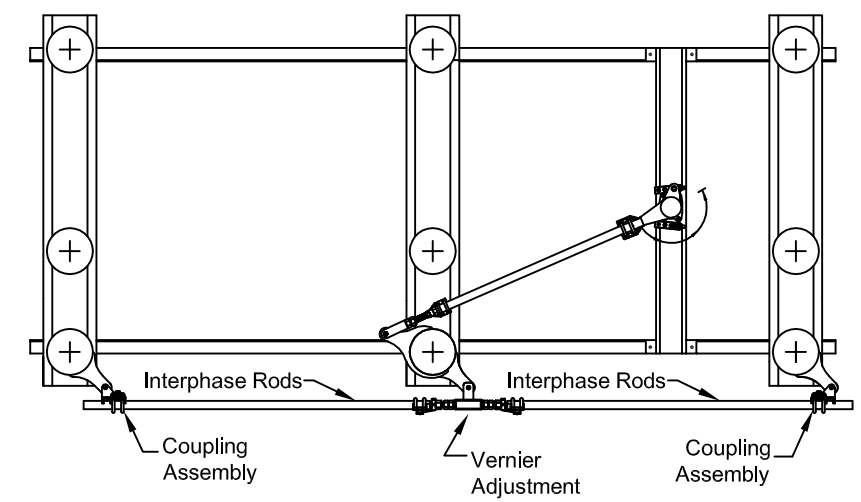

15 Adjust Interphase Linkage

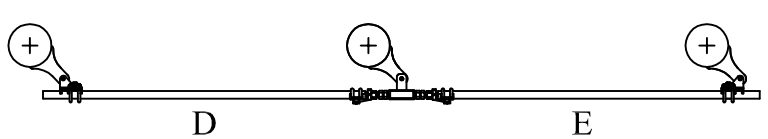

Interphase Pipe "D"

- Shorten will close more and open less.
- Lengthening will open more and close less.

Interphase Pipe "E"

- Shortening will open more and close less.
- Lengthening will close more and open less.

16 Install Arcing Horns and Corona Rings (If Applicable)

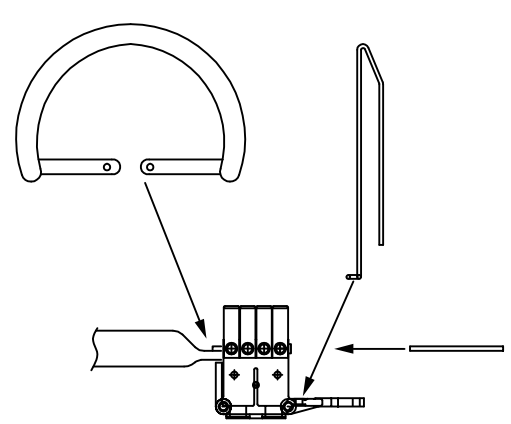

17 Final Checks

a. Blade Centered in Jaw

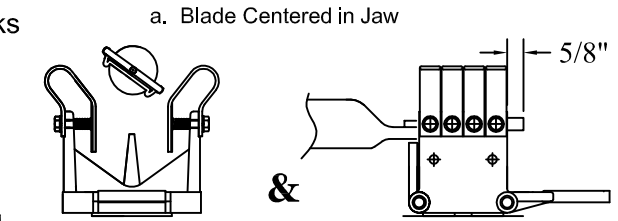

b. Blade Contact Angle is ±4° in Jaw

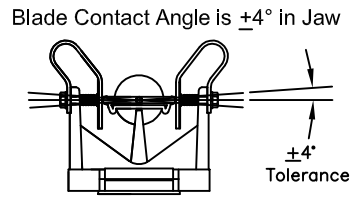

c. Blade is 0" to 5/8"Off the Blade Stop

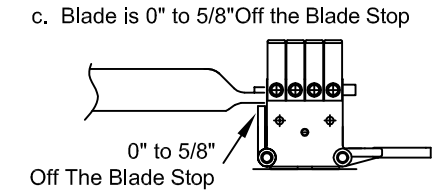

d. Blade Opening

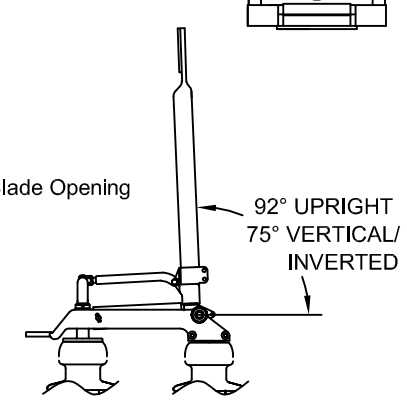

e. The offset bearing toggles in the open and close position.

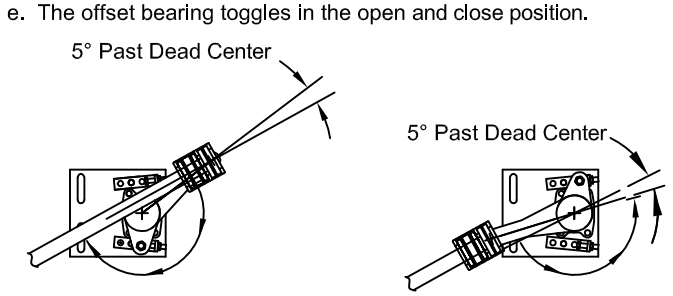

f. All jaw mounting bolts are tightened with switch in close position.

g. Tighten all locking nuts and pierce bolts.
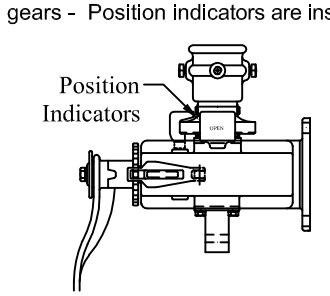
h. For worm gears - Position indicators are installed.